MULTITEL

RESEARCH AND INNOVATION CENTER

People flow measurement
Goal

Objectives

- Overview of the passengers location in the station
- Project person location on the map infrastructure

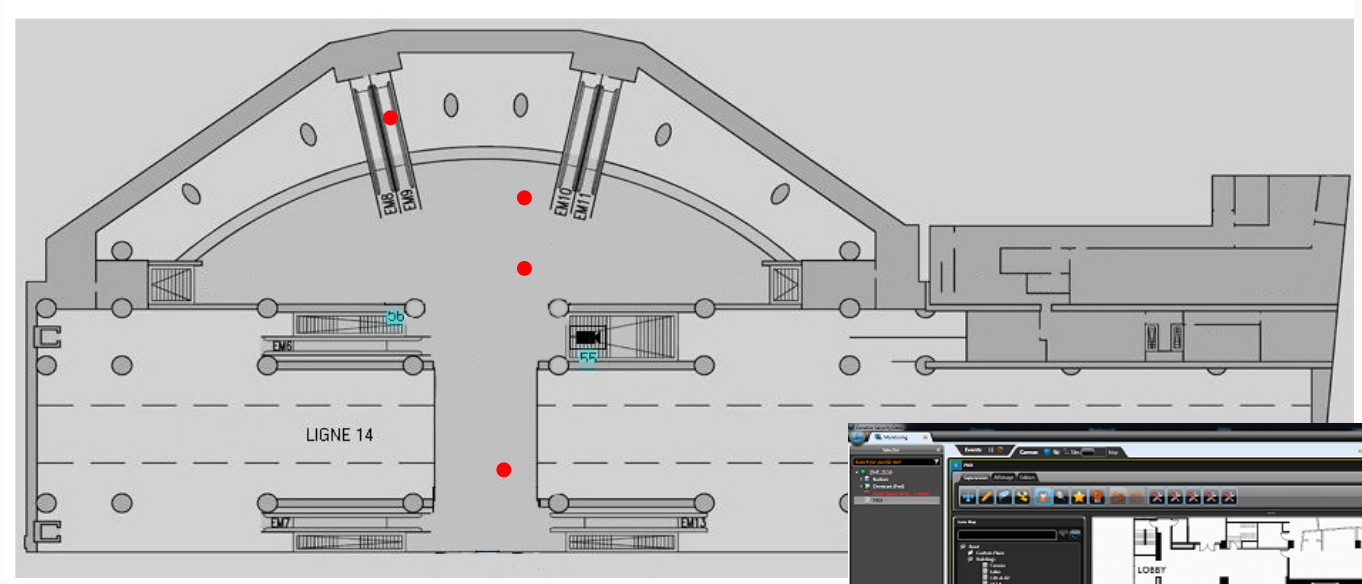

One dot = One person

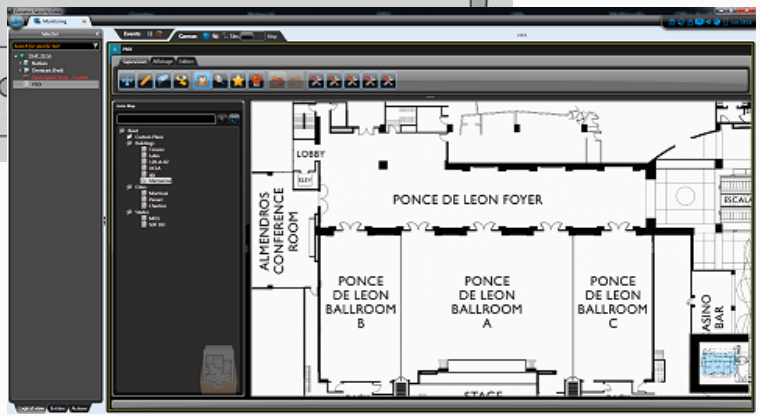

Plan Manager

People flow measurement
Goal (2)

- Populate this map using results of different algorithms:
  - People counting in escalators (HLPI event as counter flow)
  - People counting in large/crowded areas
  - Human detection in close views
  - etc.

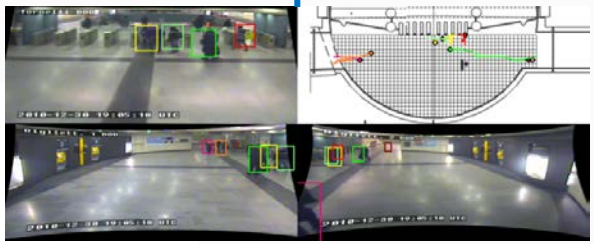

People flow in escalator

Motivation:

Monitor people flow in escalator

Module counts people crossing virtual line .

Measurements:

Cumulative counting (pers.) / Person flow (pers./min)

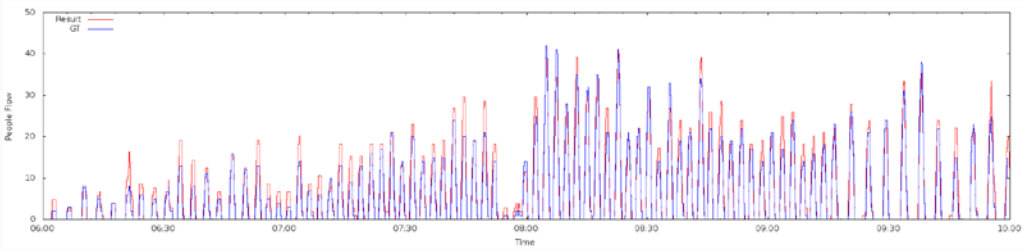

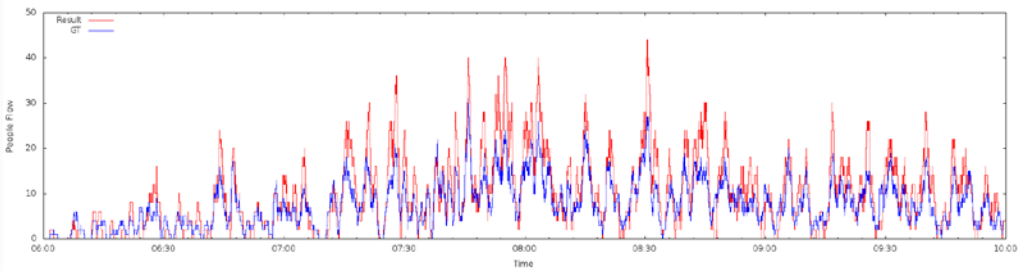

Count people that cross a virtual line

People flow in escalator (2)

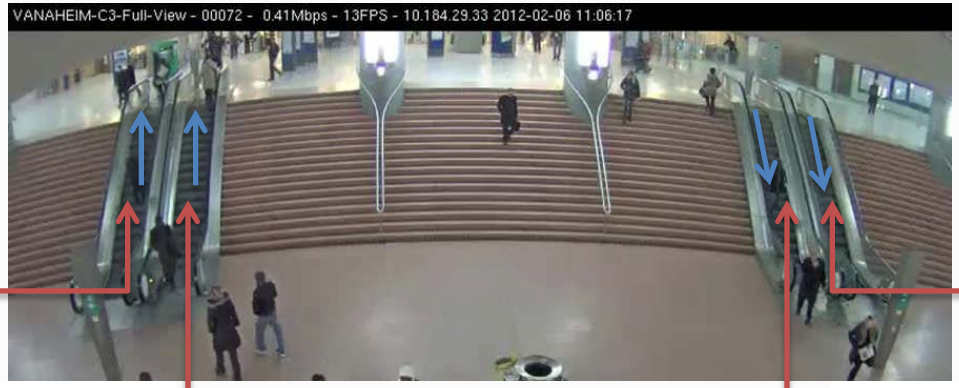

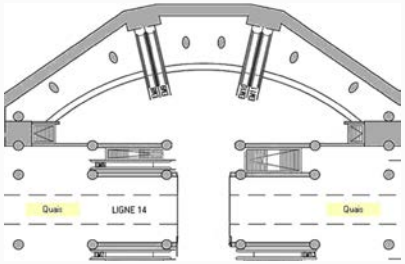

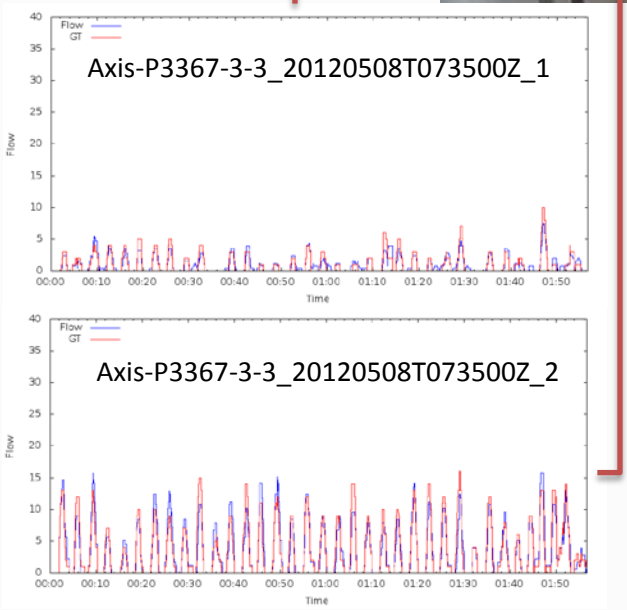

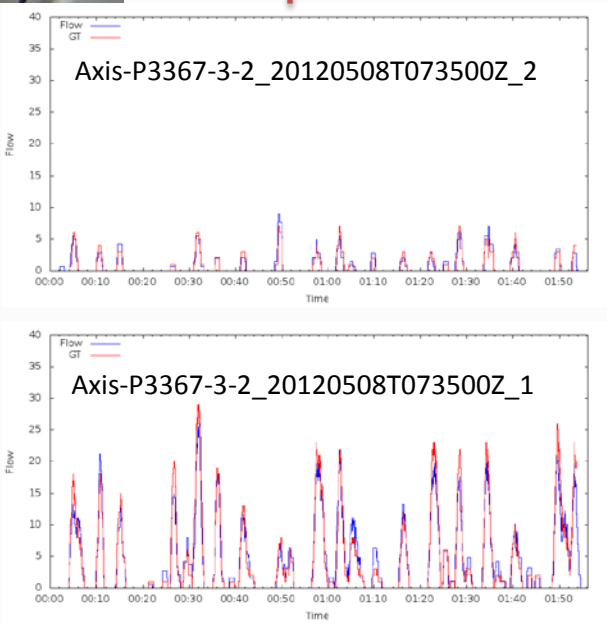

Counter flow in escalator

Motivation:

Detect undesirable and potentially dangerous counter flow in escalator

Can also point out e.g. defaulting escalator or incivilities, runaways, etc.

Approach:

Analyze movement direction of each detected person (for escalator flow monitoring)

Detected events in RATP/GTT: teenagers playing, defaulting escalator, luggage.

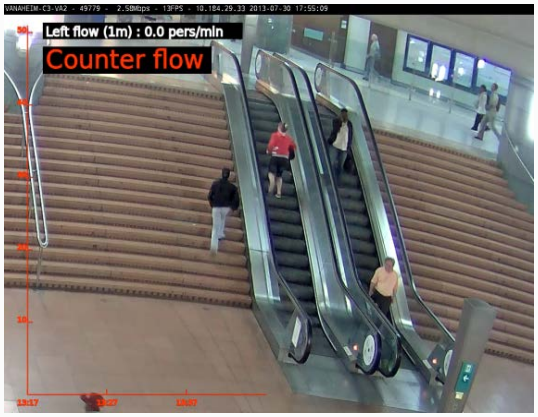

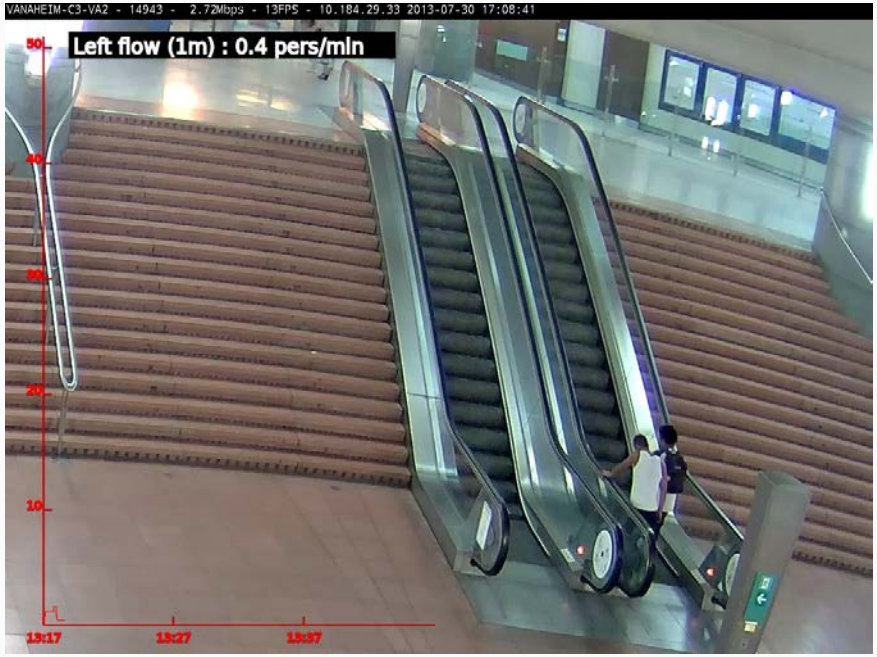

People flow in escalator display

- Use escalator counting results.
- First detection = virtual counting line
- Use the speed of the escalator to predict the next position
- Bounding box = area covered

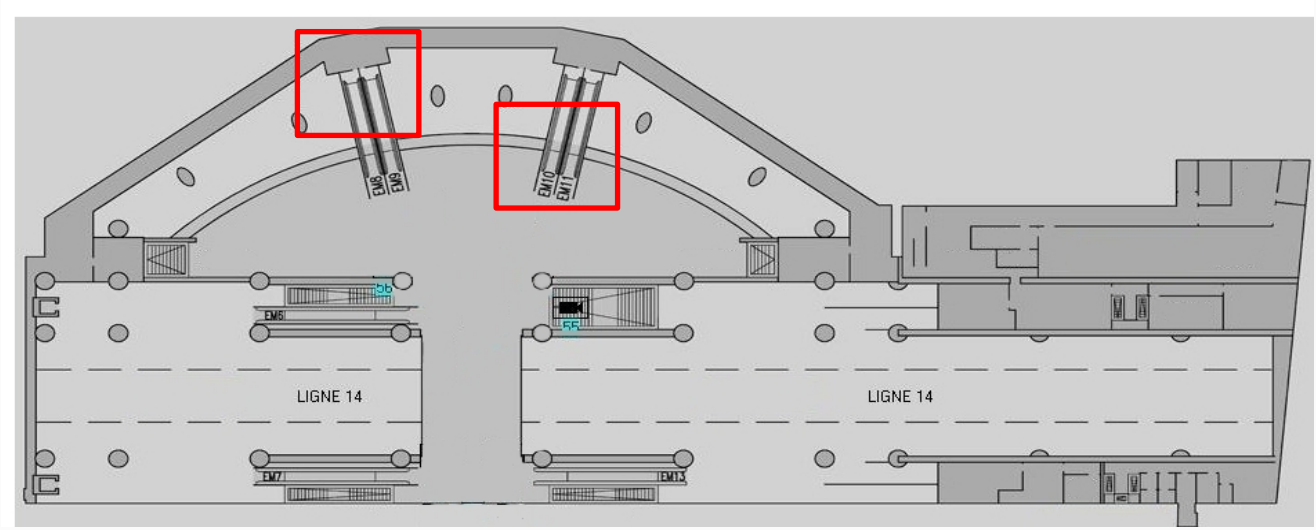

Human detection in close views

Motivation:

Detect passengers in video streams

Approach

Processing is done using appearance and spatio-temporal features.

A human/non-human classifier is then used to detect people presence.

Run real-time

Scene independent

Performance between 80%-90%

Difficulty due to occlusion (crowd)

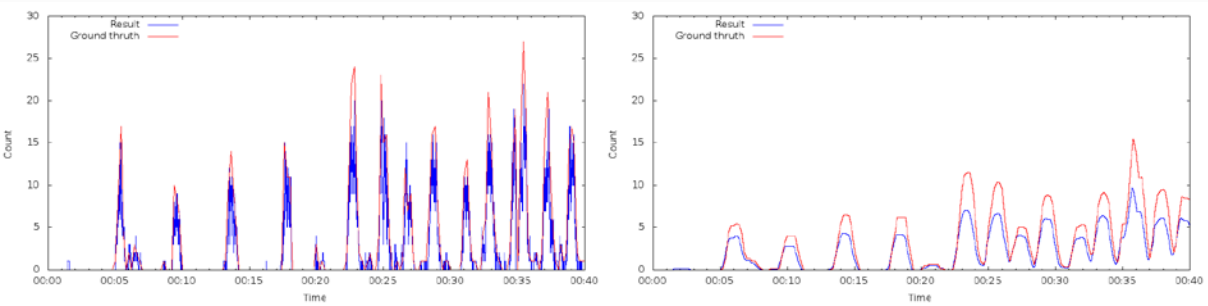

Human detection in close views display

- Use human detector output
- Bounding box = area covered

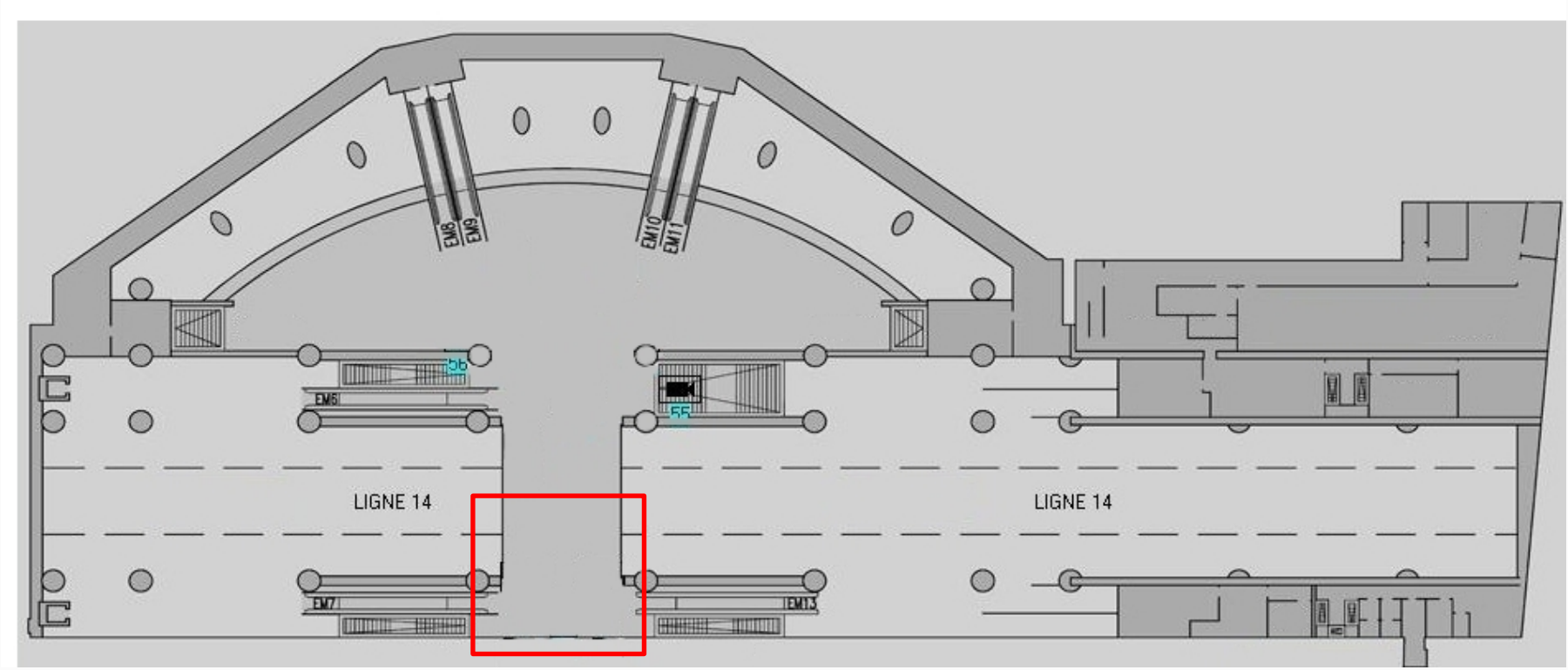

People counting in large areas

Approach:

Processing is done using background estimation technique

Running real-time

Configuration scene-dependent

But better performances until fully occupied (congestion)

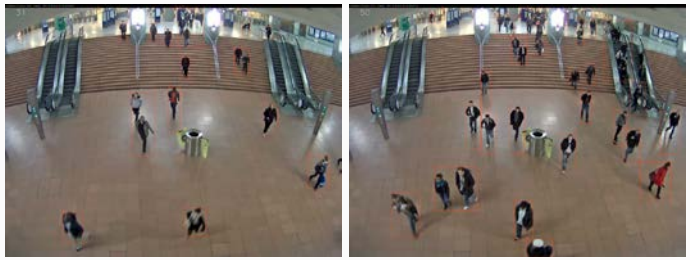

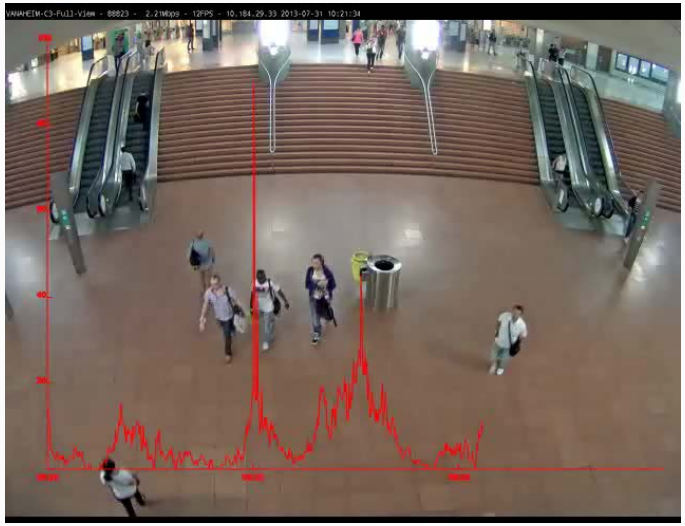

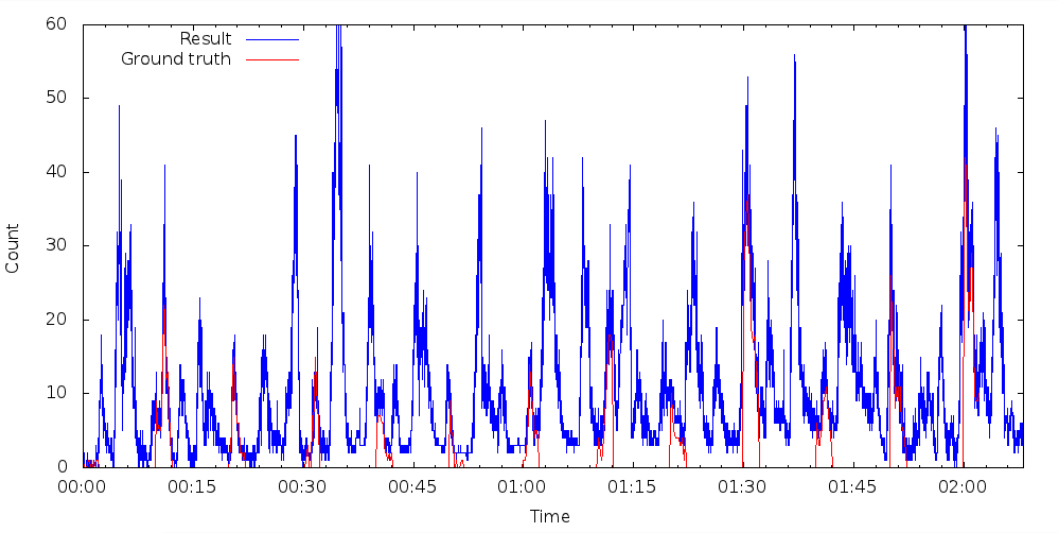

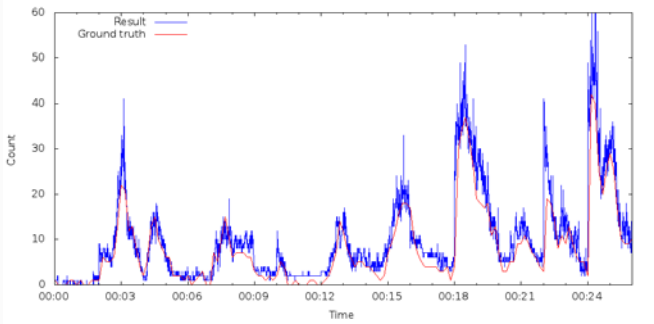

People counting in large areas

- Use the result of the detection
- Bounding box = area covered

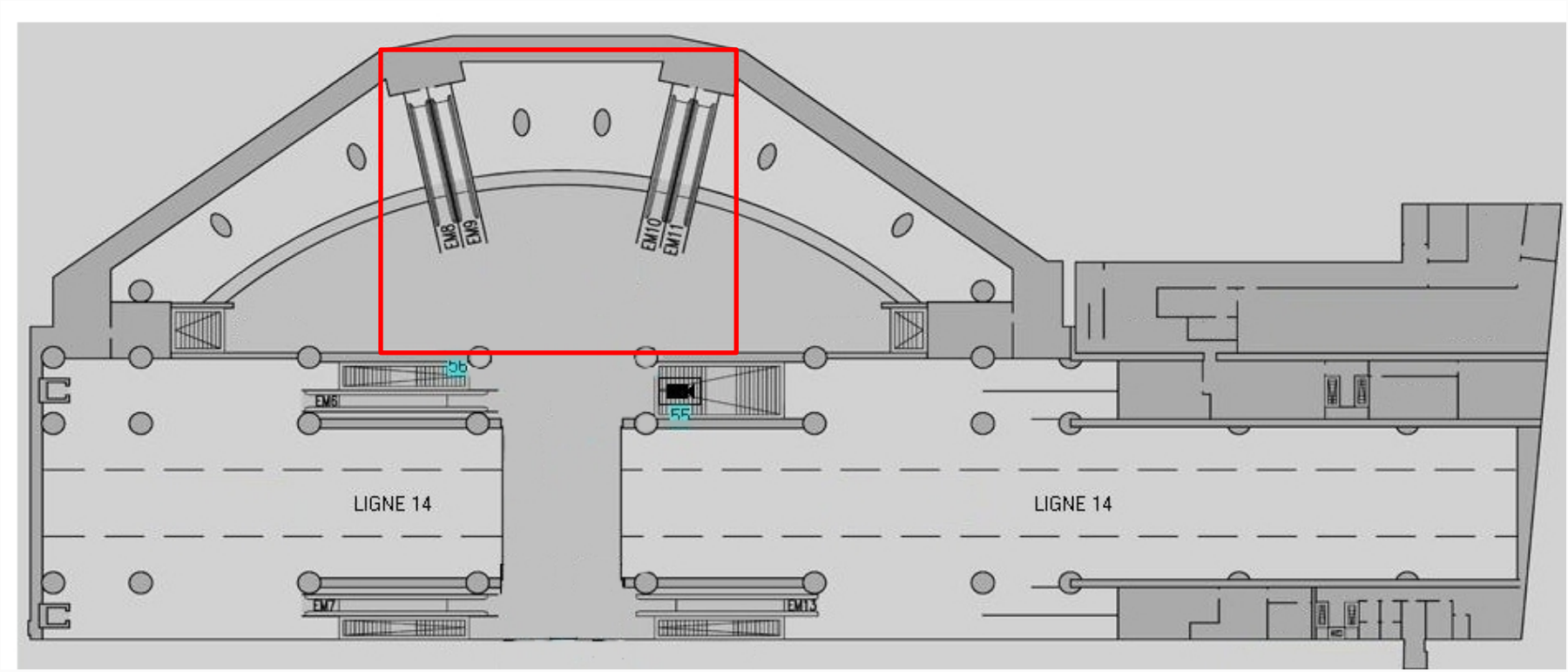

Complete RATP situational reporting

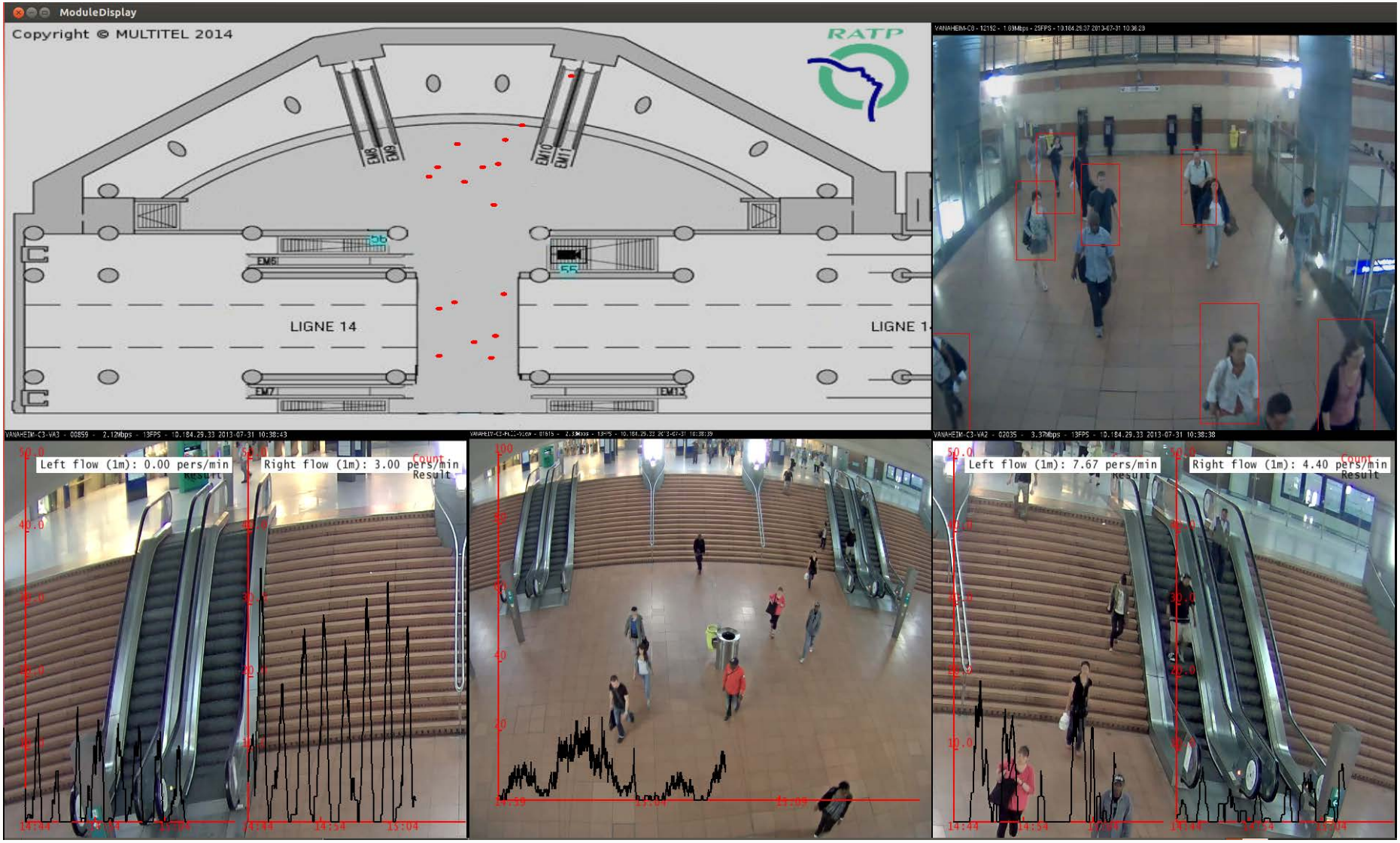

Complete GTT situational reporting

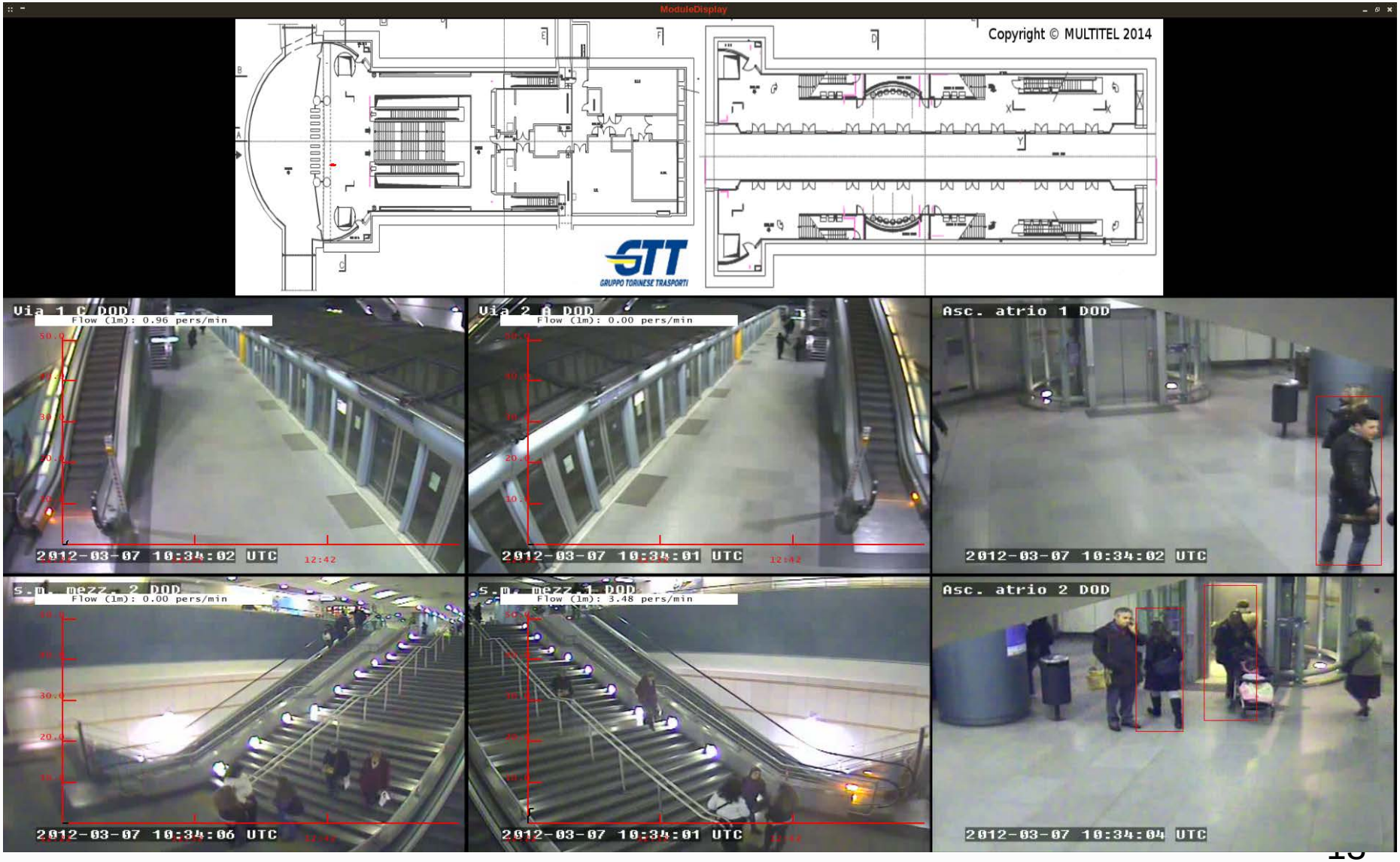

FP7 VANAHEIM project

www.vanaheim-project.eu

Large-scale integrating project (IP)

- ✓ **Duration**: 44 months (Feb. 2010 – Sept. 2013)
- ✓ **Budget**: 5.471.851 € (EU contrib. 3.717.998 €)

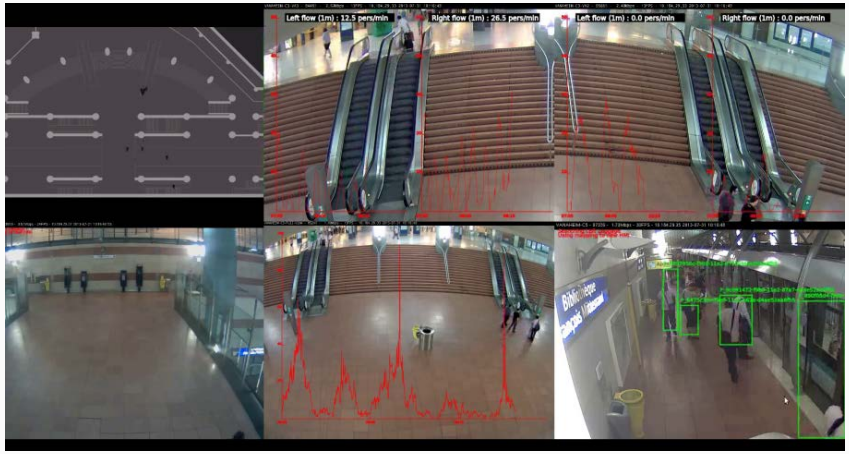

Deployments (RATP & GTT)

– People counting and people flow measurements (situational reporting)
– Activity clustering & anomaly detection

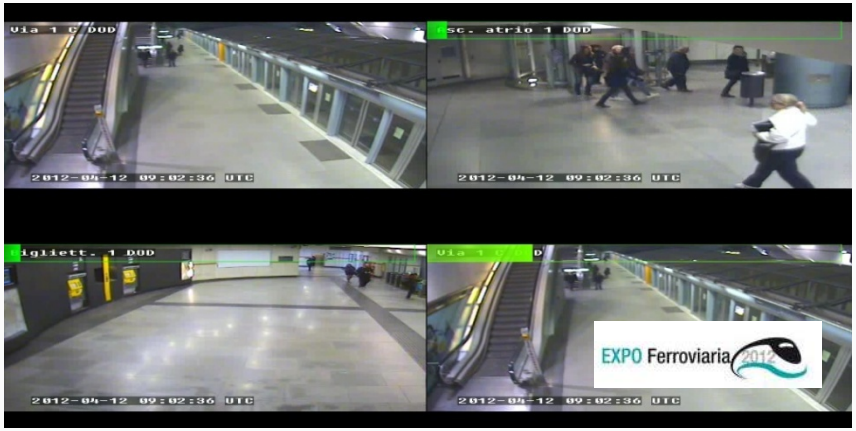

- → Counter flow
- → Falling people (people gathering)
- → Heckling
- → Lost person
- → Person distributing leaflets
- → Cleaning staff emptying a garbage
- → Persons phone calling
- → etc.

Visit http://www.multitel.be/image/

for more information